# Multimedia System

[BE IT 5th Semester]

Rishi K. Marseni
{rkmarseni@ncit.edu.np}

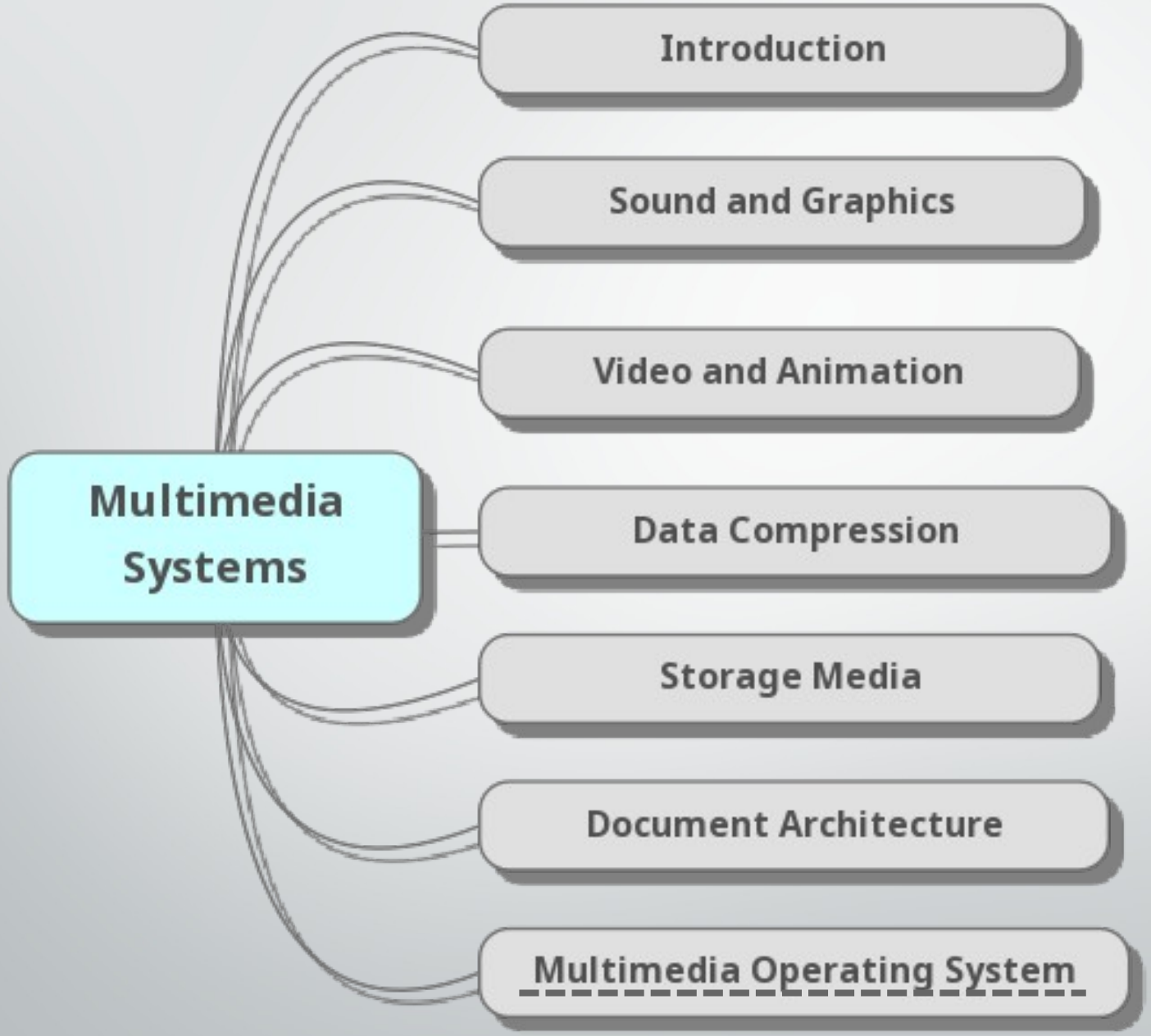
Multimedia Systems
Introduction
Sound and Graphics
Video and Animation
Data Compression
Storage Media
Document Architecture
Multimedia Operating System

[ Unit 7 ]

# Multimedia Operating System and Communication Systems

7.1. Introduction to MOS,
Real Time Systems and Deadline

7.1.1. Resource Management:
Resource and Requirements

7.1.2. Phases of Resource Reservation and

Management Process, Allocation Scheme

7.1.3. Continuous Media Resource Model

7.1.4. Process Management, Real Time Processing Requirement,

Traditional Real Time Scheduling
(EDF and RMA)

7.2 Communication Architecture:
Application and Transport Subsystem

7.2.1 Session Management, Multimedia Workstation

7.2.2 Quality of Service and Resource Management, Design Principle of QoS.

# Multimedia Workstation

A multimedia workstation is a computer system designed to handle audio, video, graphics, and animation efficiently

Used for creating, processing, and presenting multimedia content

**Key Features**

- High-performance CPU and GPU
- Large main memory
- High-speed storage
- Audio and video input/output devices

**Examples of Use**

- Video editing
- Audio recording and mixing
- Animation and graphic design

# Multimedia Workstation

A *multimedia workstation* is designed for the simultaneous manipulation of discrete and continuous media information. The main components of a multimedia workstation are:

- *Standard Processor(s)* for the processing of discrete media information.
- *Main Memory* and *Secondary Storage* with corresponding autonomous controllers.
- *Universal Processor(s)* for processing of data in real-time (signal processors).
- *Special-Purpose Processors* designed for graphics, audio and video media (containing, for example, a micro code decompression method for DVI processors) [Rip89, Tin89, Lut91].
- *Graphics and Video Adapters.*
- *Communications Adapters* (for example, the Asynchronous Transfer Mode Host Interface [TS93].
- Further *special-purpose adapters.*

# Multimedia Workstation

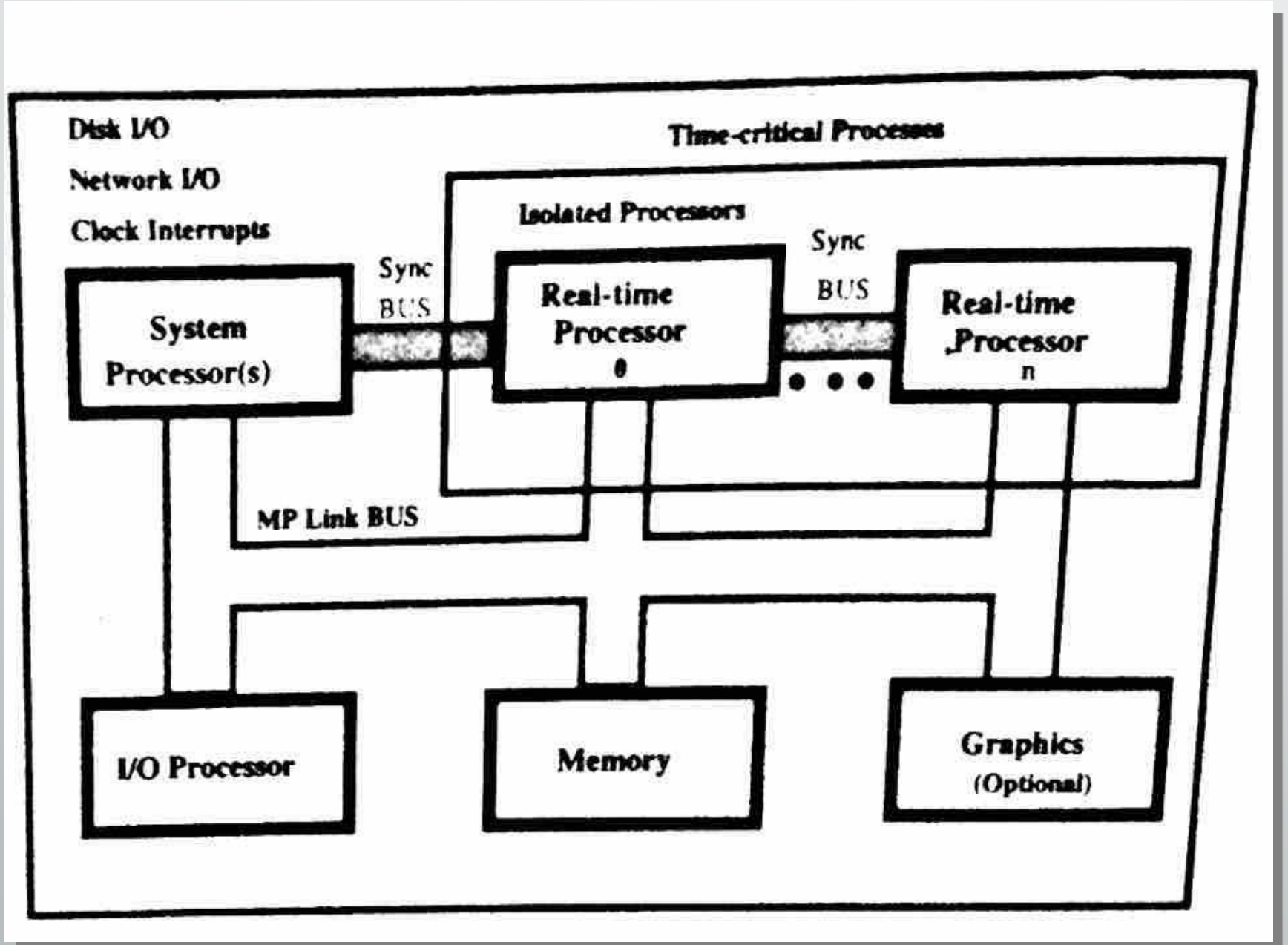

# Introduction to MOS

The operating system provides a comfortable environment for the execution of programs, and it ensures effective utilization of the computer hardware.

The OS offers various services related to the essential resources of a computer: CPU, main memory, storage and all input and output devices.

In multimedia applications, a lot of data manipulation (e.g. A/D, D/A and format conversion) is required and this involves a lot of data transfer, which consumes many resources.

# Introduction to MOS / Function of MOS

The integration of discrete and continuous multimedia data demands additional services from many operating system components.

The major aspect in this context is *real-time processing* of continuous media data.

# Introduction to MOS / Function of MOS

**Issues concerned**:

- Process management: a brief presentation of traditional real-time scheduling algorithms.
- File systems: outlines disk access algorithms, data placement and structuring
- Interprocess communication and synchronization
- Memory management
- Database management
- Device management

# Introduction to MOS / Function of MOS

*Process management* must take into account the timing requirement imposed by the handling of multimedia data.

• Concerns in process management (Scheduling):

| | Traditional OS | MM OS |
|---|---|---|
| Timing requirement | No | Yes |
| Fairness | Yes | Yes |

# Introduction to MOS / Function of MOS

Single components are conceived as resources that are reserved prior to execution to obey timing requirements and this *resource reservation* has to cover all resources on a data path.

The *communication & synchronization between single processes* must meet the restrictions of real-time requirements and timing relations among different media.

# Introduction to MOS / Function of MOS

*Memory management* has to provide access to data with a guaranteed timing delay and efficient data manipulation functions. (e.g. should minimize physical data copy operations.)

*Database management* should rely on file management services

# Multimedia Real Time System

A real-time process is a process which delivers the results of the processing in a given time-span.

The main characteristic of real-time systems is the correctness of the computation.

- Errorless computation
- The time in which the result is presented

# Multimedia Real Time System

Speed and efficiency are not the main characteristic of real-time systems. (e.g. the video data should be presented at the right time, neither too quickly nor too slowly)

Timing and logical dependencies among different related tasks, processed at the same time, must also be considered.

# Multimedia Real Time System

**Deadlines**:

A deadline represents the latest acceptable time for the presentation of a processing result.

- Soft deadline:
  - a deadline which cannot be exactly determined and which failing to meet does not produce an unacceptable result.
  - Its miss may be tolerated as long as (1) not too many deadlines are missed and/or (2) the deadlines are not missed by much.

# Multimedia Real Time System

- Hard deadline:
  - a deadline which should never be violated.
  - Its violation causes a system failure.
  - Determined by the physical characteristics of real-time processes.

# Multimedia Real Time System

**Characteristics of real time systems**

The necessity of deterministic and predictable behavior of real-time systems requires processing guarantees for time-critical tasks.

A real-time system is distinguished by the following features:

- Predictably fast response to time-critical events and accurate timing information:
- A high degree of schedulability: to meet the deadlines.
- Stability under transient overload: critical task first.

# Multimedia Real Time System

**Real time and multimedia**

The real-time requirements of traditional real-time scheduling techniques usually have a high demand for security and fault-tolerance. (Most of them involve system control.)

# Multimedia Real Time System

Real-time requirements of multimedia systems:

- The fault-tolerance requirements of multimedia systems are usually less strict than those of real-time systems that have a direct physical impact.
- For many multimedia system applications, missing a deadline is not a severe failure, although it should be avoided. (e.g. playing a video sequence)
- In general, all time-critical operations are periodic and schedulability considerations for periodic tasks are much easier.
- The bandwidth demand of continuous media is usually negotiable and the media is usually scalable.

# Multimedia Real Time System

**Resource management**

Multimedia systems with integrated audio and video processing are at the limit of their capacity even with data compression and utilization of new technology. (Demand increases drastically.)

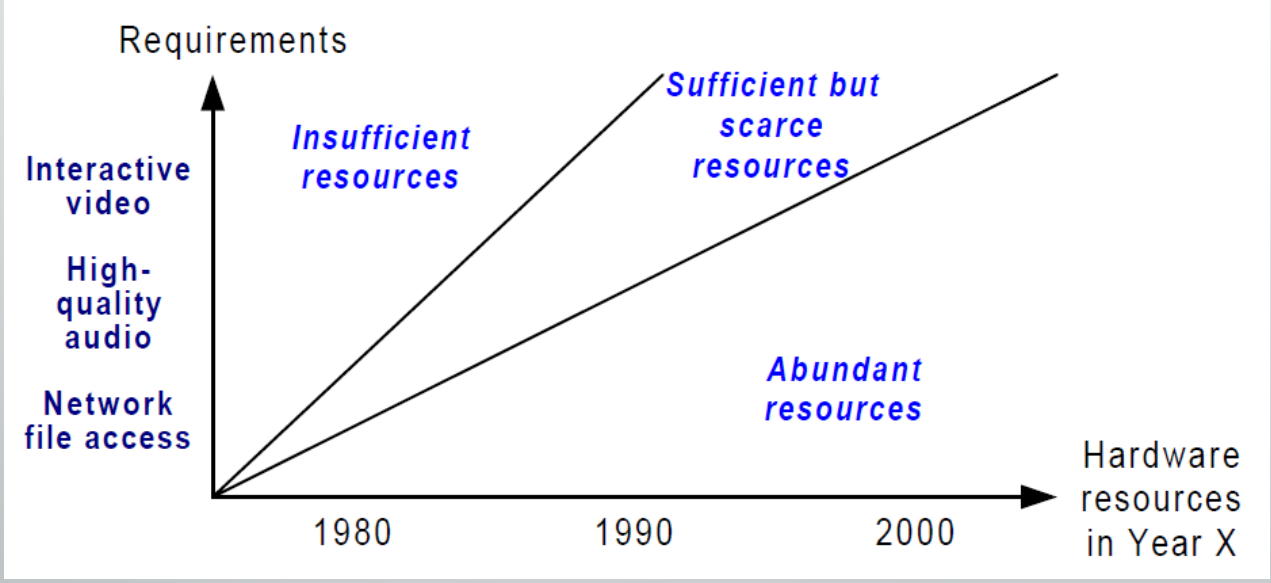

# Multimedia Real Time System

No redundancy of resource capacity can be expected in the near future.

In a multimedia system, the given timing guarantees for the processing of continuous media must be adhered to along the data path.

The actual requirements depend on (1) the type of media and (2) the nature of the applications supported.

The shortage of resources requires careful allocation.

The resource is first allocated and then managed.

# Multimedia Real Time System

At the connection establishment phase, the resource management ensures that the new 'connection;' does not violate performance guarantees already provided to existing connections.

Applied to OS, resource management covers the CPU (including process management), memory management, the file system and the device management.

The resource reservation is identical for all resources, whereas the management is different for each.

# Multimedia Real Time System

**Resources**

A resource is a system entity required by tasks for manipulating data.

A resource can be active or passive.

- Active resource:
  - e.g. the CPU or a network adapter for protocol processing;
  - it provides a service.
- Passive resource:
  - e.g. main memory, communication bandwidth or file systems;
  - It denotes some system capability required by active resources.

# Multimedia Real Time System

**Resources**

A resource can be either used exclusively by one process at a time or shared between various processes.

Active ones are often exclusive while passive ones can usually be shared.

Each resource has a capacity in a given time-span. (e.g. processing time for CPU, the amount of storage for memory and etc.)

For real-time scheduling, only the temporal division of resource capacity among real-time processes is of interest.

# Multimedia Real Time System

**Requirements**

The requirements of multimedia applications and data streams must be served.

The transmission/processing requirements of local and distributed multimedia applications can be specified according to the following characteristics:

- *Throughput*: Determined by the needed data rate of a connection to satisfy the application requirements.
- *Delay "at the resource"* (local): The maximum time span for the completion of a certain task at this resource.
- *End-to-end delay* (global): The total delay for a data unit to be transmitted from the source to its destination.
- *Jitter*: Determines the maximum allowed variance in the arrival of data at the destination.
- *Reliability*: Defines error detection and error correction mechanisms used for the transmission and processing of multimedia tasks.
  - How to handle errors: Ignored, indicated and / or corrected.
  - Retransmission may not be acceptable for time critical data.
- These requirements are known as *Quality of Service* (QoS) parameters.

# Multimedia Real Time System

**Components and phases**

Resource allocation and management can be based on the interaction between clients and their respective resource managers.

The client selects the resource and requests a resource allocation by specifying its QoS specification.

The resource manager checks its own resource utilization and decides if the reservation request can be served or not.

Performance can be guaranteed once it is accepted.

# Multimedia Real Time System

**Components and phases (cont…)**

Phases of the resource reservation and management process

1. *Schedulability*
   - The resource manager checks with the given QoS parameters (e.g. throughput and reliability).
2. *QoS calculation*
   - The resource manager calculates the best possible performance (e.g. delay) the resource can guarantee for the new request.
3. *Resource reservation*
   - Allocates the required capacity to meet the QoS guarantees for each request.
4. *Resource scheduling*
   - Incoming messages (i.e. LDUs) from connections are scheduled according to the given QoS guarantees.

# Multimedia Real Time System

**Allocation Scheme**

Reservation of resources can be made either in a pessimistic or optimistic way:

The pessimistic approach avoids resource conflicts by making reservations for the worst case. (It's very conservative.)

The optimistic approach reserves resources according to an average workload only.

# Multimedia Real Time System

**Allocation Scheme (cont..)**

| | Pessimistic approach | Optimistic approach |
|---|---|---|
| Account for | Worst case | Average case |
| QoS | Guaranteed | Best effort |
| Utilization | Low | High |
| Remarks | | May need a monitor to detect overload situation and act |

# Multimedia Real Time System

**Continuous media resource model**

A model is frequently adopted to define QoS parameters and the characteristics of the data stream.

It is based on the model of linear bounded arrival process (LBAP).

A distributed system is decomposed into a chain of resources traversed by the messages on their end-to-end path.

The data stream consists of LDUs (messages). Various data streams are independent of each other.

The model considers a burst of messages consists of messages that arrived ahead of schedule.

# Multimedia Real Time System

## QoS Parameters in Continuous Media

- Frame rate
- Resolution
- Bit rate
- Latency
- Jitter

## QoS Guarantee

Achieved through:

- Resource reservation
- Predictable scheduling

# Multimedia Real Time System

## Process Management in Real-Time Systems

**Real-Time Processes:**

- A real-time process is a program in execution with explicit timing constraints
- Each process must complete execution before its deadline

**Types of Real-Time Tasks**

- Periodic Tasks: Execute at regular intervals.
  Defined by (Execution Time C, Period T, Deadline D)
  Example: Sensor data sampling
- Aperiodic Tasks: Execute irregularly, No fixed period.
  Example: User-generated events
- Sporadic Tasks: Irregular but have a minimum inter-arrival time
  Example: Emergency interrupt handling

# Multimedia Real Time System

## Process Management in Real-Time Systems

### Process States in RTS

- Ready: Task is ready to execute
- Running: Task is currently executing
- Blocked: Waiting for I/O or resource
- Completed: Task finished execution

# Real-Time Processing Requirements

To ensure predictability, real-time systems must satisfy the following requirements:

- **Determinism**: Same input and conditions produce same output and timing behavior
- **Bounded Response Time:**
  Upper limit onInterrupt latency and System call execution time
- **Preemptive Scheduling:**
  Higher-priority tasks can preempt lower-priority tasks
  Essential for meeting deadlines
- **Minimal Context Switching Overhead**
  Fast task switching to reduce delay
- **Low Jitter**
  Variation in response time must be minimal
  Very important for multimedia and control systems
- **Priority Inversion Handling**
  Use protocols like: Priority inheritance, Priority ceiling

# Traditional Real-Time Scheduling

**Scheduling Objective**

- Select the next task for CPU execution
- Ensure all accepted tasks meet their deadlines

**Key Scheduling Parameters**

- Arrival time, Execution time (C), Deadline (D), Period (T), Priority

**Classification of Scheduling Algorithms**

- Clock-driven scheduling (time-triggered)
- Priority-driven scheduling (event-triggered)

**Traditional Scheduling Approaches**

- Static priority scheduling
- Dynamic priority scheduling

# Real-Time Scheduling

## Earliest Deadline First (EDF)

EDF is a real-time scheduling method where:

Priority keeps changing

Task with nearest deadline runs first

**Main Rule: Earlier deadline = higher priority**

EDF is a dynamic priority scheduling algorithm

Task priority changes during execution

The task with the nearest deadline gets the highest priority

When too many tasks arrive, EDF may miss many deadlines

It uses processor time more efficiently than fixed-priority methods

# Real-Time Scheduling

## Rate Monotonic Algorithm (RMA)

RMA is a real-time CPU scheduling method.

- It uses fixed priority
- Priority is decided once
- Priority never changes

**Main Rule : Task that repeats faster gets higher priority**

Short time gap → High priority

Long time gap → Low priority

- RMA works properly only when tasks are periodic
- CPU can stop one task and run another (preemption)
- Good for **hard real-time systems**

# Real-Time Scheduling

| Feature | RMA | EDF |
|---|---|---|
| Priority | Fixed | Changing |
| Based On | Period | Deadline |
| CPU Usage | Low | High |
| Safety | Very High | Medium |
| Complexity | Simple | Complex |
| Best For | Hard RTS | Soft RTS |

[ Unit 7 ]

# Multimedia Operating System and Communication Systems

7.1. Introduction to MOS,
Real Time Systems and Deadline

7.1.1. Resource Management:
Resource and Requirements

7.1.2. Phases of Resource Reservation and

Management Process, Allocation Scheme

7.1.3. Continuous Media Resource Model

7.1.4. Process Management, Real Time Processing Requirement,

Traditional Real Time Scheduling
(EDF and RMA)

7.2 Communication Architecture:
Application and Transport Subsystem

7.2.1 Session Management, Multimedia Workstation

7.2.2 Quality of Service and Resource Management, Design Principle of QoS.

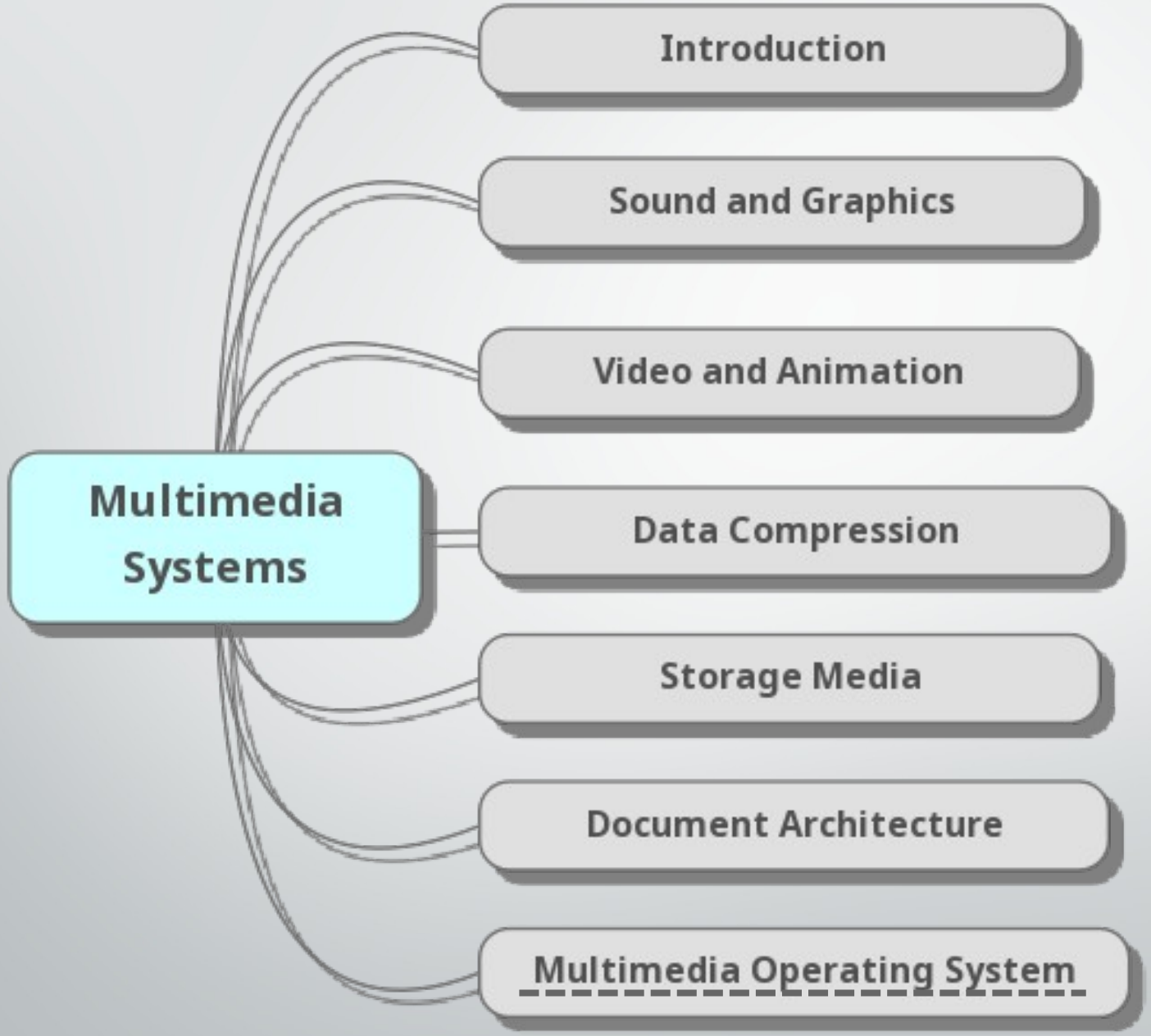
Multimedia Systems
Introduction
Sound and Graphics
Video and Animation
Data Compression
Storage Media
Document Architecture
Multimedia Operating System